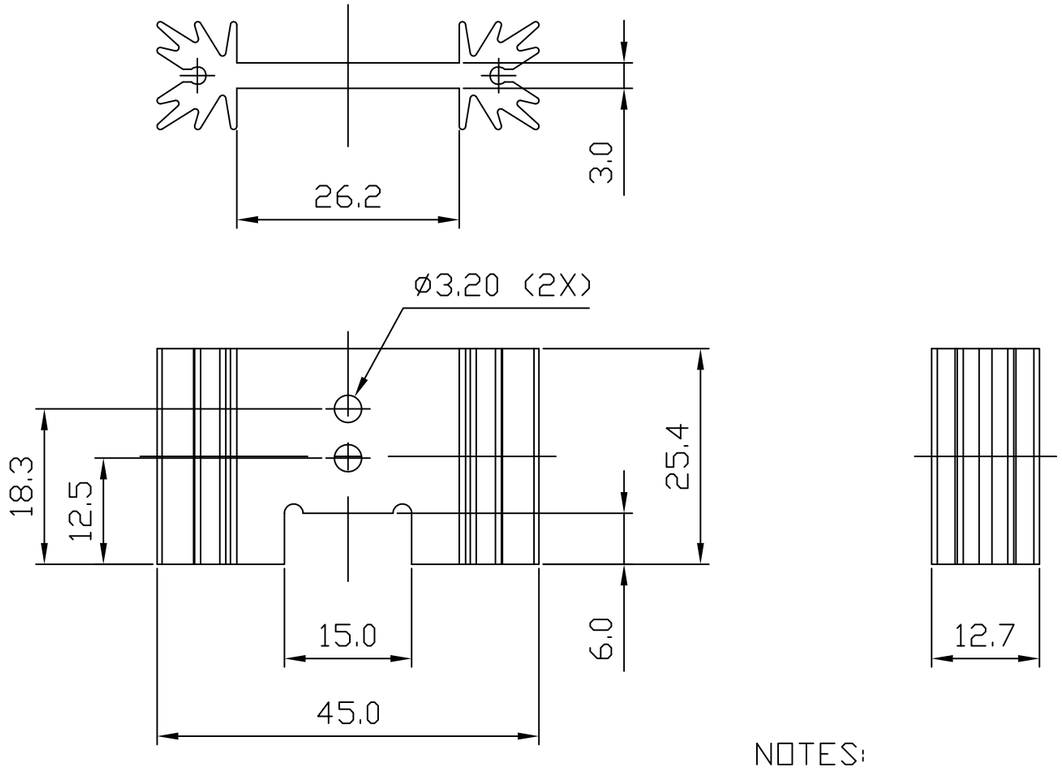

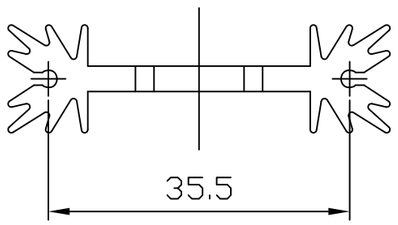

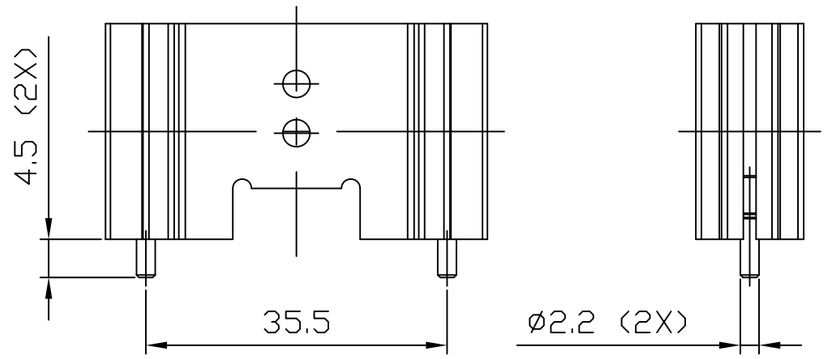

ASSEMBLY

REVISIONS

REV.	COMMENT	DATE	APPROVED
0	INITIAL RELEASE	2023-07-24	CHRIS

NOTES:
1. THIS DRAWING CONTAINS OVERALL DIMENSIONS ONLY.
   REFER TO 3D CAD DATABASE FOR COMPLETE PART INFORMATION.
2. PARTS TO BE CLEAN AND FREE OF CRACKS, FOREIGN MATTER.
   NO OIL OR LUBRICANTS ON THE SURFACE.
3. ALL DIMENSIONS SHOWN SHALL BE CHECKED AT FIRST ARTICLE INSPECTION.
4. REMOVE ALL BURRS AND SHARP EDGES.
5. FINISHED PRODUCT TO BE RoHS COMPLIANT.
6. TOLERANCE: ±0.30mm

ITEM	QTY.	DESCRIPTION	MATERIAL	REMARK
2	2	PIN	CRS	FINISH: TIN PLATED
1	1	HEAT SINK	AL 6063-T5	FINISH: BLACK ANODIZE

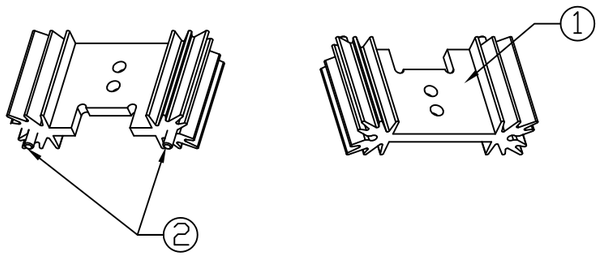

ISOMETRIC VIEW
SCALE 1:2

DIMENSIONAL TOLERANCE		
DECIMAL PLACES	MILLIMETERS	INCHES
.	-	-
.X	-	-
.XX	-	-
UNLESS OTHERWISE SPECIFIED		
ANGULAR DIMENSIONS	THIRD ANGLE PROJECTION	
± 1.0°		
SCALE 1:1	UNIT mm	SIZE A4

DRAWN: SIDNEY
CHECKED: CHRIS
APPROVED: CHRIS

TITLE: EXTRUDED PC MOUNT HEAT SINK
MATERIAL: SEE TABLE
FINISH: SEE TABLE
CUS. PART NO.:
CUS. REV.:
PART NO.: JBHAE0351
REV.: 0
SHEET: 1 OF 1
DATE: 2023-07-24