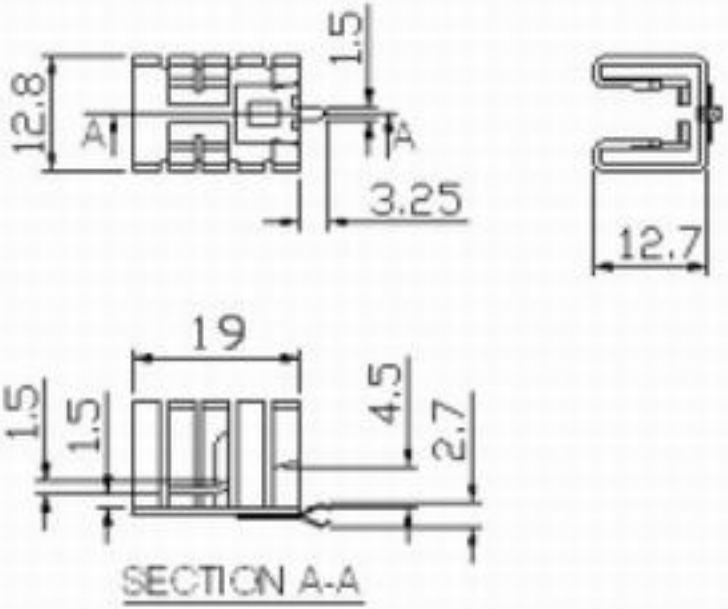PART NO :	JT-T220-0060-06
MATERIAL :	AL5052 T=0.8mm
FINISH :	BLACK ANODIZED
REMARK :