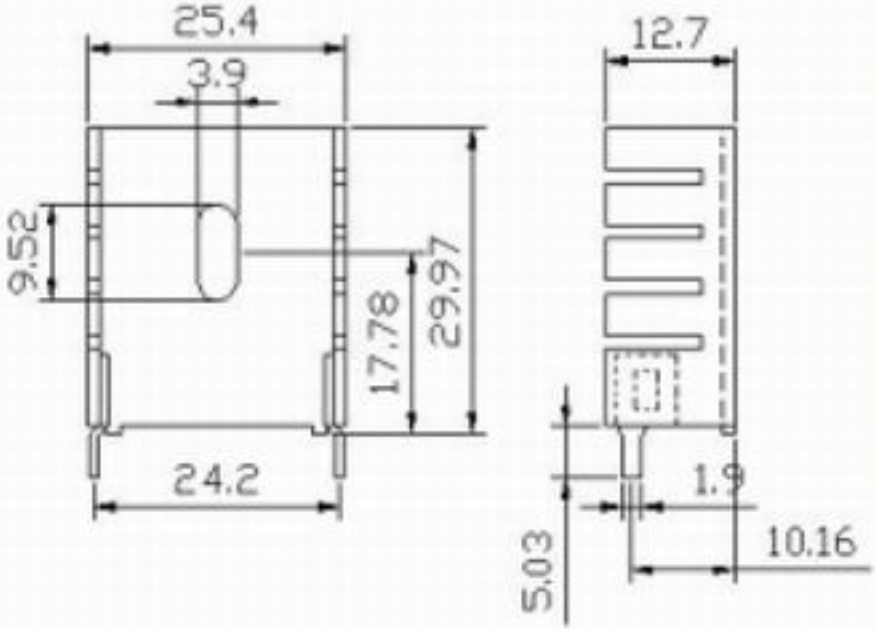PART NO :	JT-T220-0042-007
MATERIAL :	AL1050 T=1.2mm
FINISH :	BLACK ANODIZED
REMARK :