REVISIONS			
REV.	COMMENT	DATE	APPROVED
0	INITIAL RELEASE	2023-03-07	CHRIS

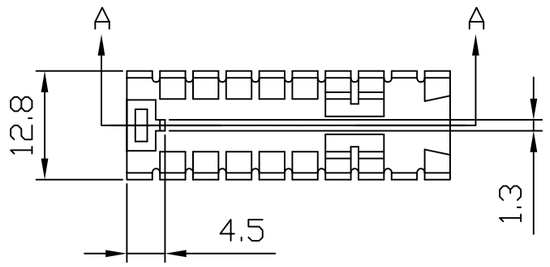

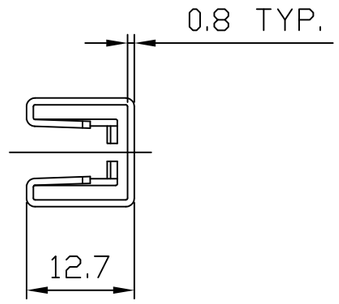

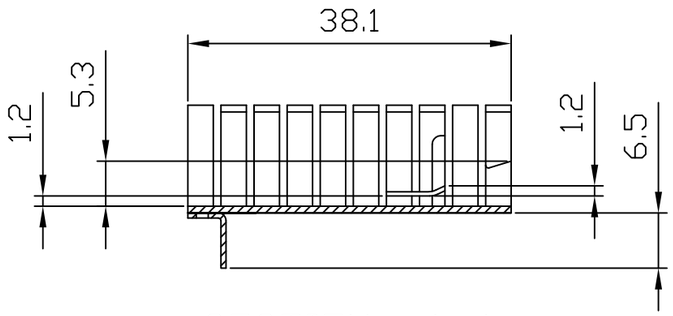

SECTION A-A

NOTES:
1. THIS DRAWING CONTAINS OVERALL DIMENSIONS ONLY.
   REFER TO 3D CAD DATABASE FOR COMPLETE PART INFORMATION.
2. PARTS TO BE CLEAN AND FREE OF CRACKS, FOREIGN MATTER.
   NO OIL OR LUBRICANTS ON THE SURFACE.
3. ALL DIMENSIONS SHOWN SHALL BE CHECKED AT FIRST ARTICLE INSPECTION.
4. REMOVE ALL BURRS AND SHARP EDGES.
5. FINISHED PRODUCT TO BE RoHS COMPLIANT.
6. TOLERANCE: ±0.50mm

DIMENSIONAL TOLERANCE		
DECIMAL PLACES	MILLIMETERS	INCHES
.	-	-
.X	-	-
.XX	-	-
UNLESS OTHERWISE SPECIFIED		
ANGULAR DIMENSIONS	THIRD ANGLE PROJECTION	
± 1.0°		
SCALE 1:1	UNIT mm	SIZE A4

DRAWN	SIDNEY
CHECKED	CHRIS
APPROVED	CHRIS
TITLE	STAMPED HEAT SINK
MATERIAL	AL 5052
FINISH	BLACK ANODIZE
CUS. PART NO.	CUS. REV.
PART NO. JBHAS0042	REV. 0
SHEET 1 OF 1	DATE 2023-03-07